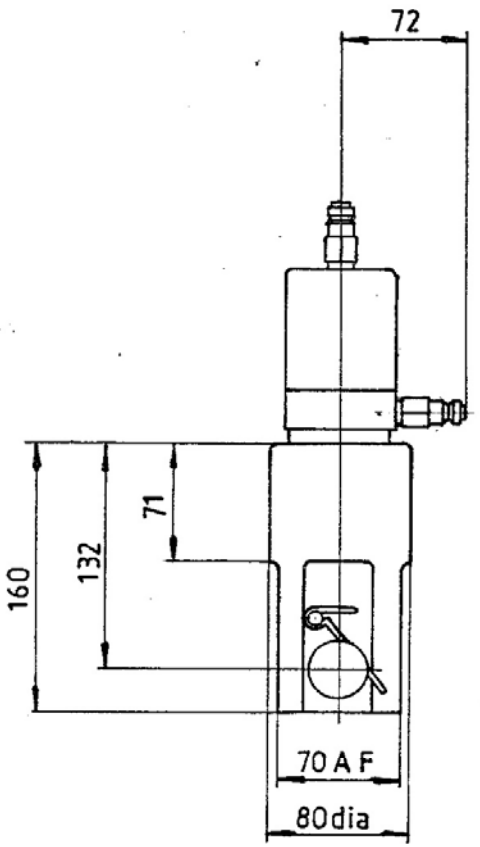

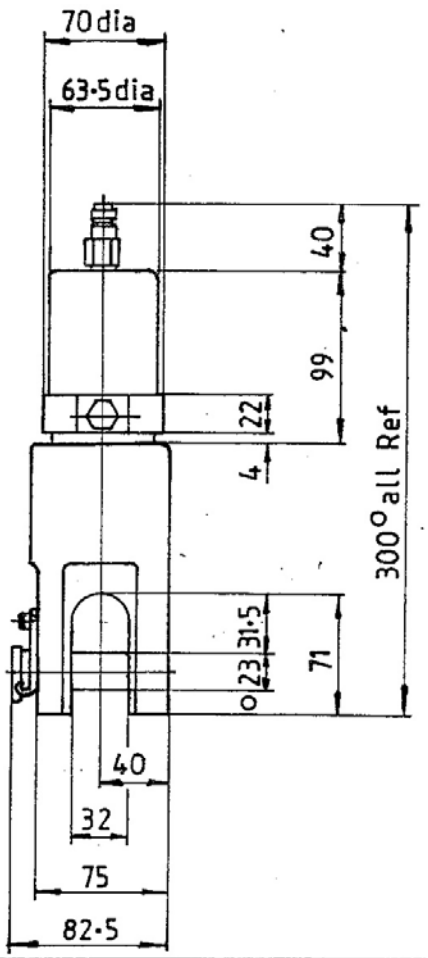

VARIATORS LTD.
61 Advance Rd., Unit 7
Toronto, Ontario M8Z 2S6
TEL: (416) **234-8671** FAX: (416) **237-9279**

No.	MOD	DATE
1	15513	22 .12.92

MATL.
GRADE
SPEC
H/T.

DIMENSIONS ~~ARE~~ ~~TOLS~~ ARE M/M. EXCEPT AS STATED

WEBTOOL

TITLE DIMENSIONS OF WC-22 CUTTER

DRAWN D. MOONEY | DATE 20-5-92.

APPROVED | SCALE N.T.S.

DRG. No. WC-6459